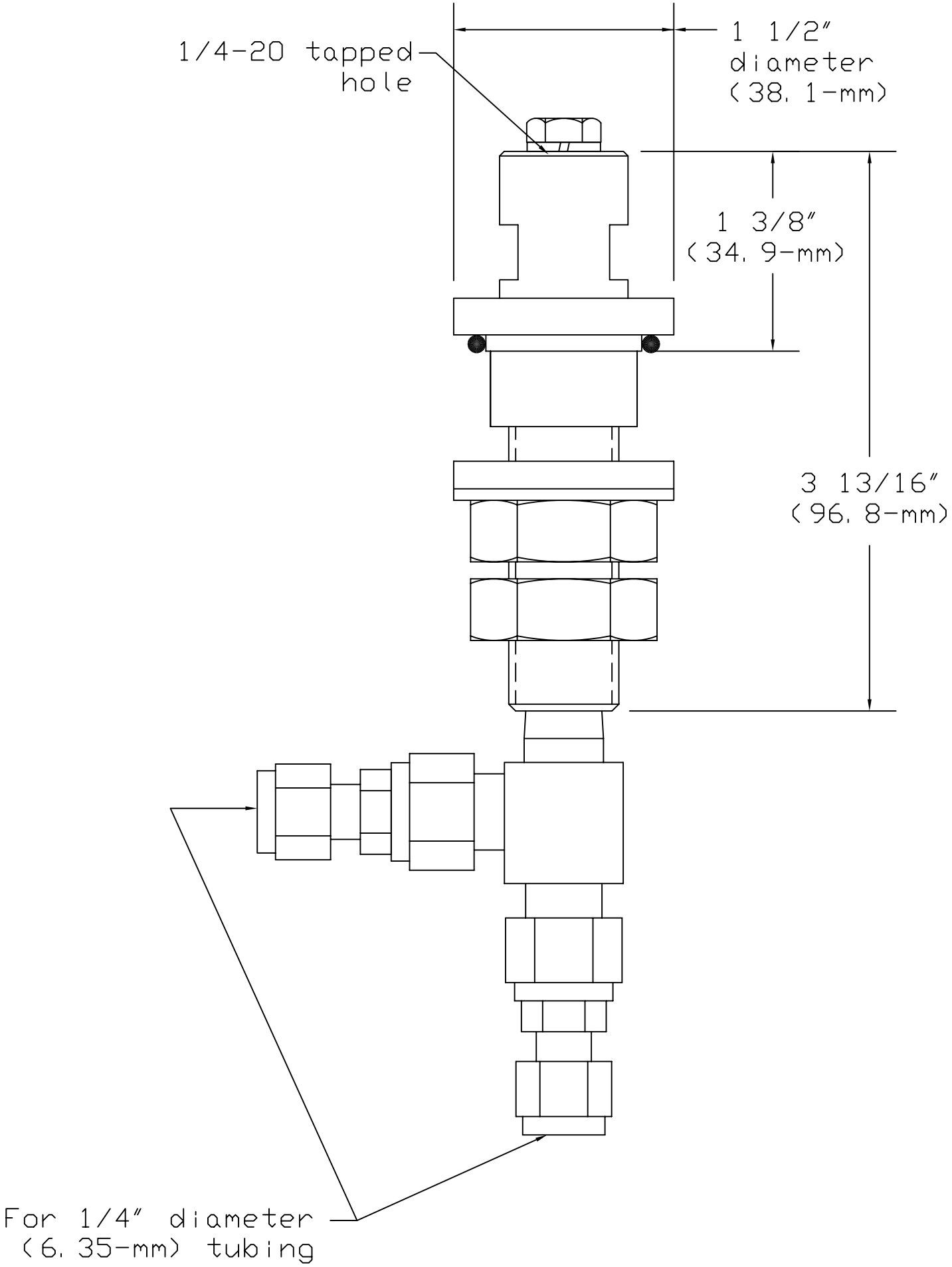

1200 Ampere High Current Feedthrough

Part No. 8620 1012 0000